Ravello

Downlighter

Innovation.
Collaboration.
Illumination.

Indoor Lighting

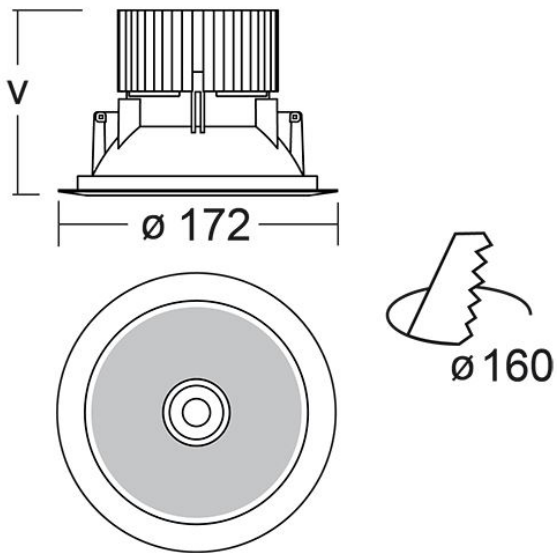

Overview

The Ravello LED downlighter is a highly efficient, environmentally friendly and cost effective downlighter designed to meet the demands of efficiency and long life.

The downlighter incorporates the latest in LED technology producing a highly efficient downlighter reaching as high as 100 lumens per watt with a life time of 50,000 hours. The specifically designed passive heat sink produces optimum thermal management results and the fast and tool free design reduces installation time.

There are both 3000K and 4000K colour temperatures available along with five wattages, various lumen outputs and supplied with a IP44 opal diffuser.

Options

- *For DALI dimmable suffix:* /DIM
- *For Casambi enabled suffix:* /CAS
- *For leading/trailing edge dimmable suffix:* /MDIM
- *For 3hr emergency suffix:* /EMR
- *For Monitor self-test emergency suffix:* /MON
- *For DALI addressable emergency suffix:* /EMP

i.e. **RAV/1700/4/OP/DIM/EMP =**
Ravello, 1700 lumens, 15W, 4000K, IP44 opal diffuser, DALI dimmable c/w DALI emergency.

CRI > 80 supplied as standard, CRI > 90 available on request.

Part No.	Lm	W	Lm/W	CCT	V(mm)
RAV/1070/3	1070	9	119	3000K	80
RAV/1090/4	1090	9	120	4000K	80
RAV/1660/3	1660	15	111	3000K	80
RAV/1700/4	1700	15	113	4000K	80
RAV/2400/3	2400	23	103	3000K	80
RAV/2460/4	2460	23	106	4000K	80
RAV/3410/3	3410	37	92	3000K	115
RAV/3500/4	3500	37	95	4000K	115
RAV/4020/3	4020	41	98	3000K	145
RAV/4130/4	4130	41	101	4000K	145

More outputs available, see www.LDL.lighting

Key features

- *IP44*
- *Impact rating of IK02*
- *Efficacy of up to 120lm/W*
- *Nominal life-time of > 50,000 h (L80/B10)*
- *Colour stability with 3 step MacAdam*
- *High colour rendering index CRI > 80*
- *Emergency BLF = 313 lm*

Please note *Due to the continuous development in LED technology, specification values may change and we reserve the right to amend the details without prior notification.*