Louis

Recessed Modular TP(a) Panel

Innovation.
Collaboration.
Illumination.

Indoor Lighting

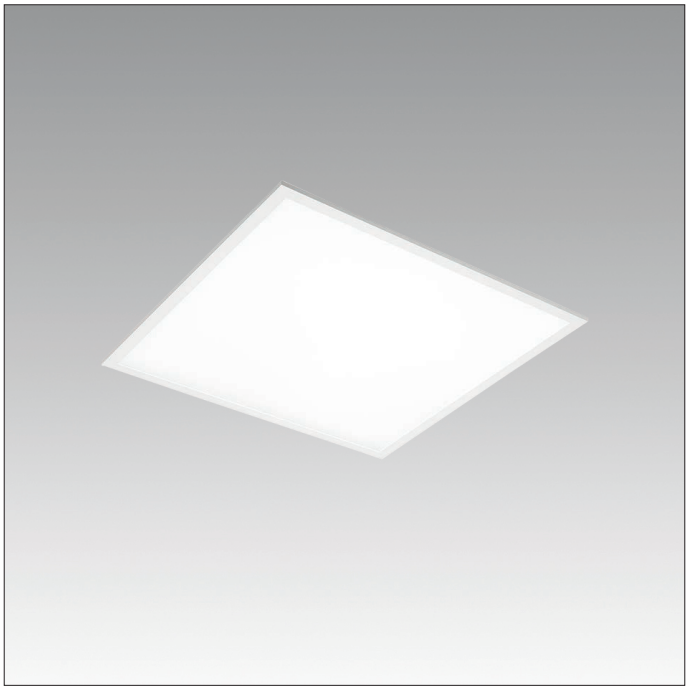

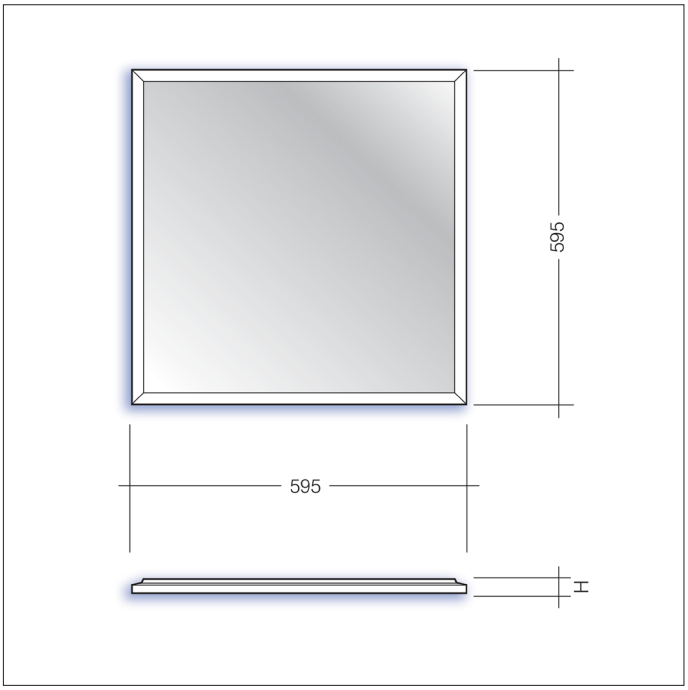

Overview

The Louis LED panel luminaire is a low energy, flicker free, low heat producing LED lighting panel with a minimum life span of 50,000 hours. The result is a highly efficient and environmentally friendly recessed modular luminaire suitable for most commercial and retail applications.

The aesthetically pleasing panel is framed in a ultra thin aluminium profile, ideal for installations where shallow ceiling voids are an issue.

Part No.	W	Lm	Lm/W	H
LOU/66/2800/4/TPA	21	2806	133	8
LOU/66/3300/4/TPA	26	3325	130	8
LOU/66/3800/4/TPA	30	3868	127	8
LOU/66/4400/4/TPA	35	4395	126	8
LOU/66/4700/4/TPA	40	4724	119	8

More outputs available, see www.LDL.lighting

Options

- *For surface option suffix (recessed is standard)* **/SF**
- *For DALI dimmable suffix* **/DIM**
- *For Casambi enabled suffix* **/CAS**
- *For wireless dimmable system suffix* **/WD**
- *For 3hr emergency suffix* **/EMR**
- *For 3hr Monitor self-test emergency suffix* **/MON**
- *For 3hr DALI emergency suffix* **/EMP**
- *For wireless addressable emergency suffix* **/WAE**

i.e.: Louis 600mm x 600mm Premium Panel, 30w, 3868 lumens, 4000K, DALI dimmable c/w Monitor self-test emergency =
LOU/66/3800/4/TPA/DIM/MON

Key features

- *TP(a) rated*
- *IP20 suitable for internal environments*
- *Impact rating of IK04*
- *Efficacy of up to 134lm/W*
- *Nominal life-time of 50,000 h (L90/B10)*
- *High colour rendering index CRI > 80*
- *Colour stability with 4 step MacAdam*
- *Emergency BLF = 330 lm*

Please note *Due to the continuous development in LED technology, specification values may change and we reserve the right to amend the details without prior notification.*