Cora

Floodlights

Innovation.
Collaboration.
Illumination.

Outdoor Lighting

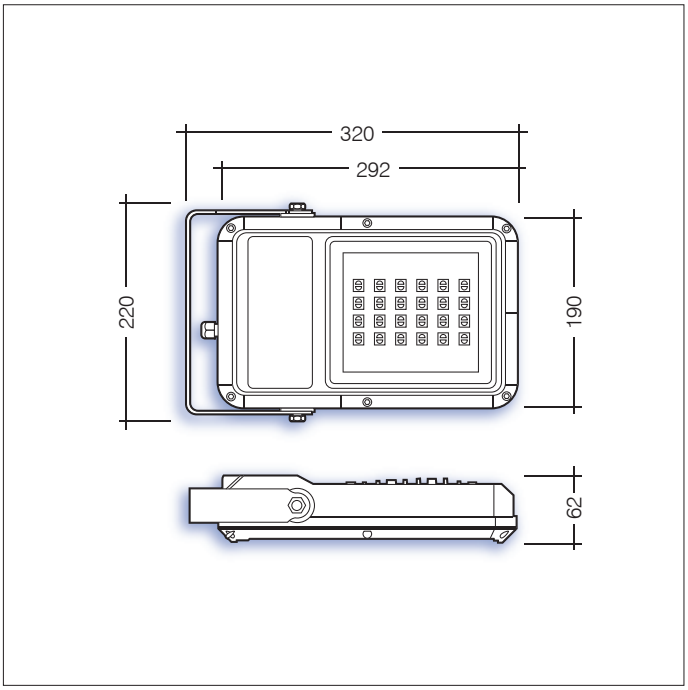

Overview

The Cora Floodlight is a highly efficient luminaire with excellent performance. The luminaire is manufactured from Die Cast Aluminium and is fitted with a clear toughened glass lens and with optics placed over each individual high power LED. Various lumen outputs are available over the two sizes of floodlight and two different optics, a forward throw and a wide flood produces excellent results to meet the highest levels of specification.

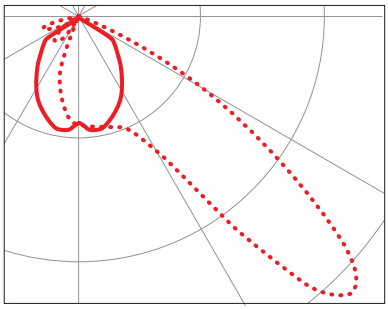

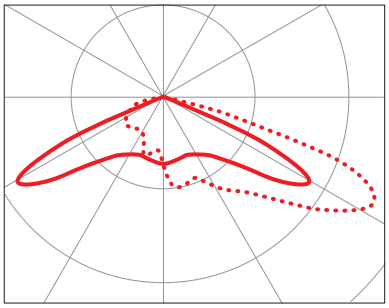

L8 Forward Flood Lens

Part No.	Lm	W	CRI	Surge Protection
COR/L8/3600/4	3648	38	80	6kV
COR/L8/4900/4	4867	53	80	6kV
COR/L8/6700/4	6705	79	80	6kV

L2 Wide Flood Lens

Part No.	Lm	W	CRI	Surge Protection
COR/L2/3200/4	3226	38	80	6kV
COR/L2/4300/4	4283	53	80	6kV
COR/L2/5800/4	5785	79	80	6kV

For more information, please contact Sales@ldl.lighting

Key Features

- *IP66 suitable for external environments*
- *Impact rating of IK10*
- *Efficacy of up to 119lm/W*
- *Nominal life-time of 50,000 h (L90/B10)*
- *Various optics avaliable*

Please note *Due to the continuous development in LED technology, specification values may change and we reserve the right to amend the details without prior notification.*