Luna

Surface Mounted

Innovation.
Collaboration.
Illumination.

Outdoor Lighting

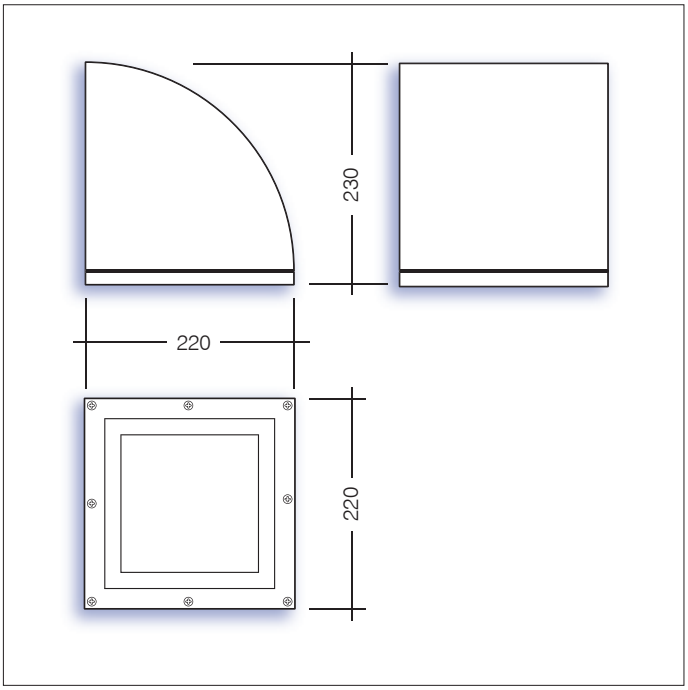

Overview

The Luna Wall luminaire is a highly efficient luminaire with excellent performance enabling ,light levels to be achieved with spacing of up to 18m.The luminaire is manufactured from die cast aluminium and is fitted with a clear toughened glass lens.

Various lumen outputs are available and variants including integral emergency and dimmable are also available to enhance the range. Two colour finishes are available as standard, graphite or silver, and the utilisation of highly efficient LED optics produces excellent results to meet the highest levels of specification.

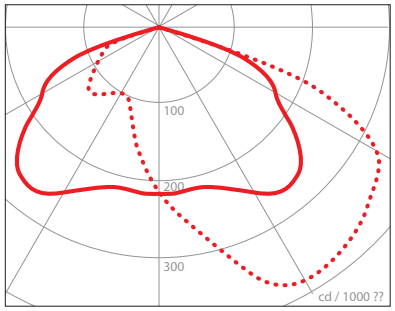

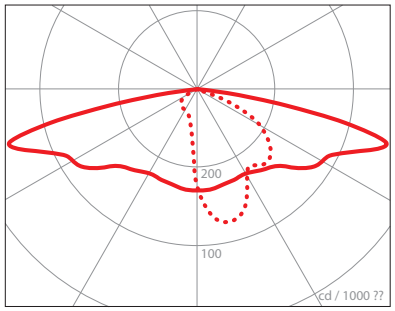

L4 Flood Lens

Part No.	Lm	W	Lm/W
LUN/L4/1300/74	1307	14	95
LUN/L4/2400/74	2364	26	91

L6 Wide Pedestrian Pathway Lens

Part No.	Lm	W	Lm/W
LUN/L6/1200/74	1205	14	87
LUN/L6/2200/74	2152	26	83

More options available, see www.LDL.lighting

Key features

- *IP65 suitable for external environments*
- *Impact rating of IK08*
- *Efficacy of up to 95lm/W*
- *Nominal life-time of 50,000 h (L90/B10)*
- *Emergency BLF = 276lm*

Please note *Due to the continuous development in LED technology, specification values may change and we reserve the right to amend the details without prior notification.*