Alexa

Installation Guide

Innovation.
Collaboration.
Illumination.

Indoor Lighting

1.

Remove the endcaps from the fitting by unscrewing retained screws.

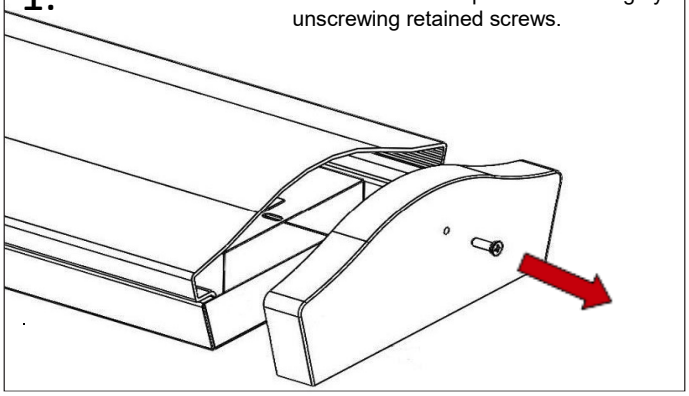

2.

Unhook diffuser from luminaire housing by gently squeezing the diffuser along its length.

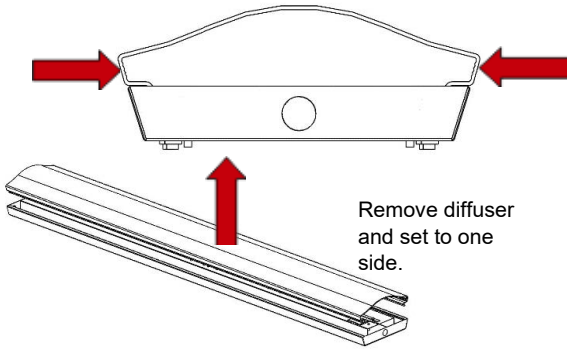

3.

Loosen screws in the gear tray.

Slide gear tray to one end to remove.

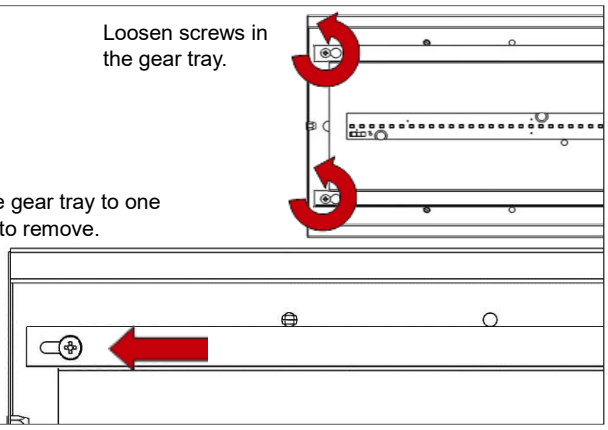

4.

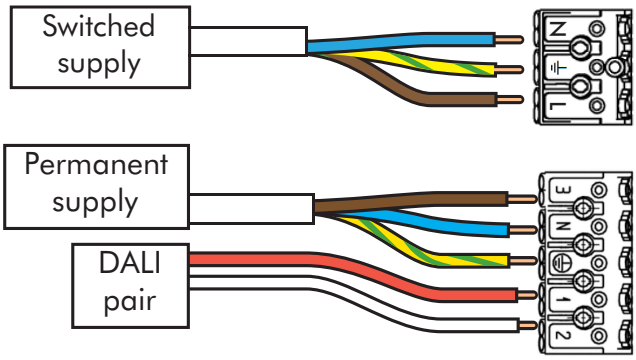

5.

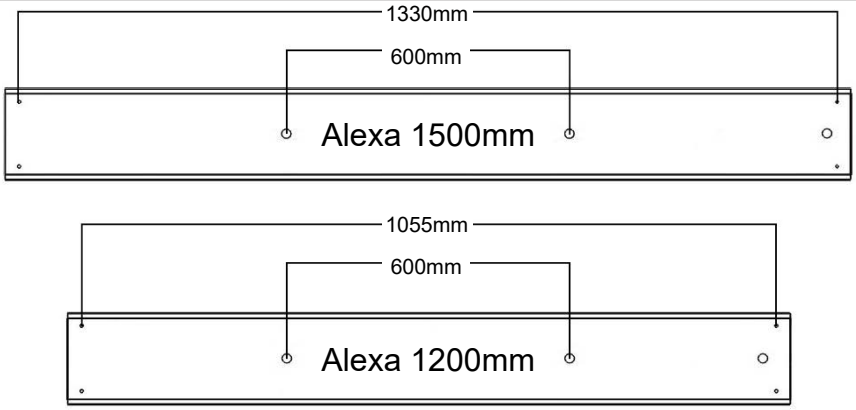

6.

Slide gear tray to lock screw on to key hole slot.

Tighten screws on the gear tray.

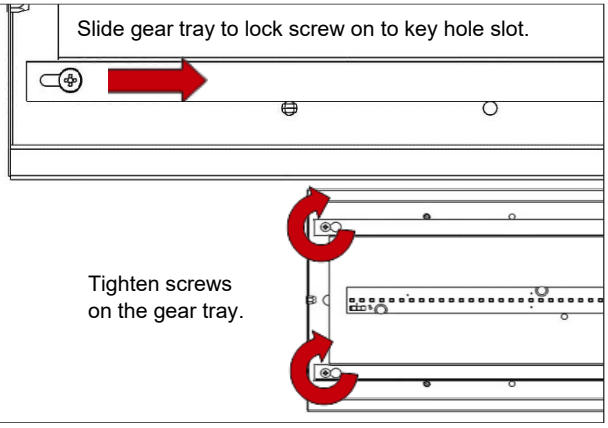

7.

Re-fit the endcaps the endcaps and the retaining screws.

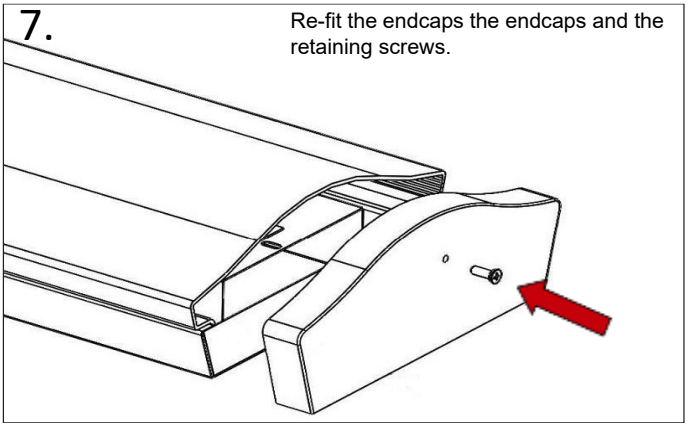

Please note *Due to the continuous development in LED technology, specification values may change and we reserve the right to amend the details without prior notification.*